Part number:

HYDROMA HYDRAULICKÉ SYSTÉMY | HIDROMA SISTEMS UKŁADY HYDRAULICZNE | HYDROMA ГИДРАВЛИЧЕСКИЕ СИСТЕМЫ

NV12-20

NEEDLE VALVE

Overview

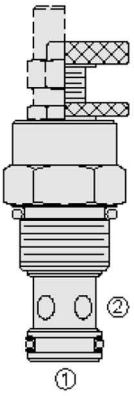

Description

A screw-in, cartridge style, variable orifice, hydraulic flow restrictor valve.

Operation

The NV12-20 valve increases its orifice size from fully closed to fully open with counter-clockwise adjustment rotation.

Features

- Adjustments cannot be backed out of the valve.
- Desired settings may be locked down.
- Hardened parts for long life.
- Aluminum knob option.
- Positive shut-off.
- Linear adjustment.
- Cost-effective cavity.

Symbol

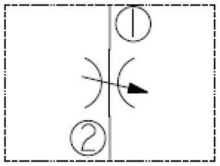

Ratings

Pressure Ratings

Pressure rating	241 bar (3500 psi)
Proof pressure	345 bar (5000 psi)
Burst pressure	896 bar (13000 psi)

Flow Ratings

Flow rating	See pressure drop vs. flow chart	
Maximum internal leakage	0.15 ml/min (3 drops/min)	**- Note:** At shut-off

Temperature Ratings

Operating fluid temperature	-40 to 100 °C (-40 to 212 °F)	**- Note:** With buna N seals
	-26 to 204 °C (-15 to 400 °F)	**- Note:** With fluorocarbon seals
	-54 to 107 °C (-65 to 225 °F)	**- Note:** With polyurethane seals
	-40 to 149 °C (-40 to 300 °F)	**- Note:** With HNBR seals
Storage temperature	-40 to 70 °C (-40 to 160 °F)	
Ambient temperature	-40 to 70 °C (-40 to 160 °F)	

Operating Parameters

Fluids	Mineral based or synthetic hydraulic fluid with lubricating properties
Fluid viscosity range	7.4 to 420 cSt
Maximum operating contamination level	18/16/13 per iso4406

Properties

Adjustment torque	0.3 to 0.6 N-m (3to 5 in-lb)	**- Note:** At 241 bar (3500 psi)
Unit weight	0.23 kg (0.50 lb)	**- Note:** Option A
Internal wetted surface area	94 cm² (14.6 in²)	

Performance

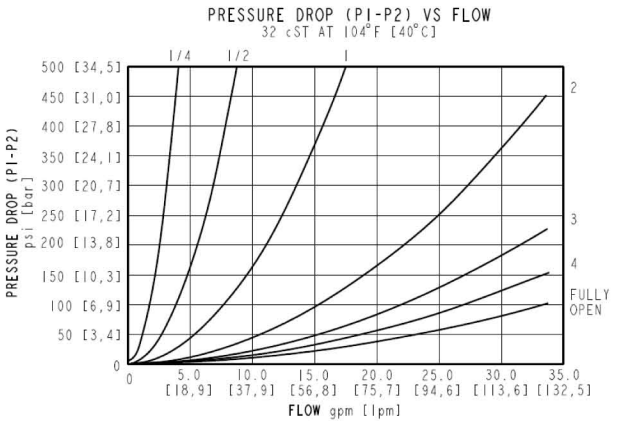

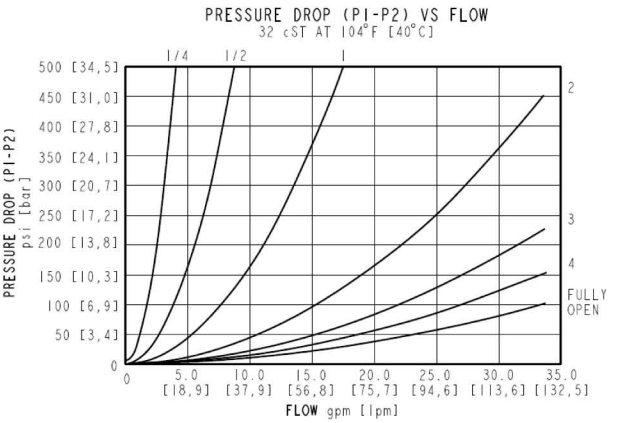

Dimensions

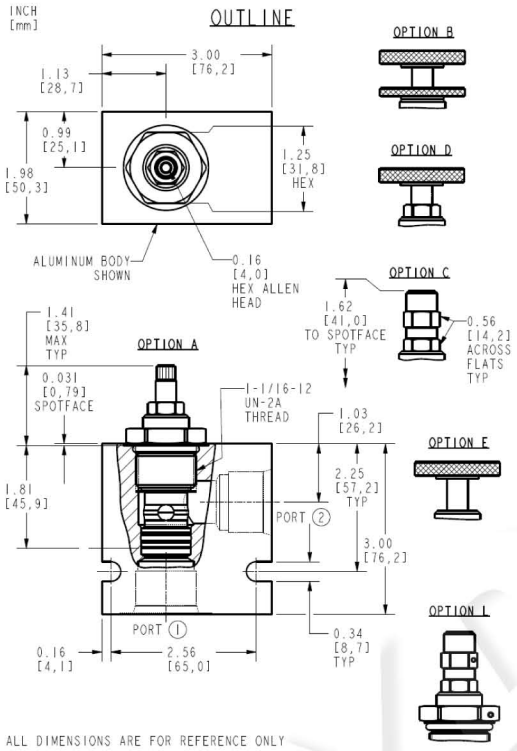

Installation Specifications

Cavity	VC12-2 or HNV12-2
Cartridge installation torque	122 to 136 N-m (90 to 100 ft-lb)
Orientation restriction	None

Accessories

Seal kit	SK12-2X-M-115 **- Note:** Buna N, Fluorocarbon, HNBR SK12-2P-0 **- Note:** Polyurethane

Order Code

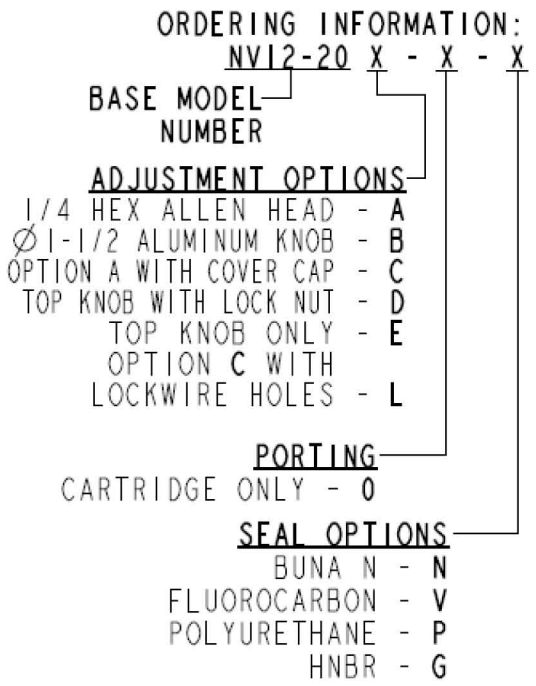

Model Options

NV12-20F-H-J

F Adjustment Option

CODE	DESCRIPTION
A	1/4" Hex Allen Head
B	1-1/2" Diameter Aluminum Knob with Aluminum Lock Knob
C	1/4" Hex Allen Head with Cover Cap
D	1-1/2" Diameter Aluminum Knob with Lock Nut
E	1-1/2" Diameter Aluminum Knob Only
L	1/4" Hex Allen Head with Cover Cap and Lockwire Holes

H Line Body

CODE	DESCRIPTION
0	No Body
10T	Aluminum SAE 10
12T	Aluminum SAE 12
16T	Aluminum SAE 16
12TD	Ductile Iron SAE 12
16TD	Ductile Iron SAE 16
8B	Aluminum BSPP 1" (8)
8BD	Ductile Iron BSPP 1" (8)

J Seal

CODE	DESCRIPTION
N	Buna-N
V	Fluorocarbon
P	Polyurethane
U	PPDI Urethane