MANIFOLDS (SECTION 2)
SPECIAL CAVITY

2 WAY STEEL

Inches / (mm)

CAVITY	017-E
Dimensions on page	CT.S.005.U

ORDERING CODE	PORTS A-B	WEIGHT Lbs (Kg)
OC.10.09.074	G 1/2	1.984 (0.900)
OC.10.09.073	G 3/4	1.984 (0.900)

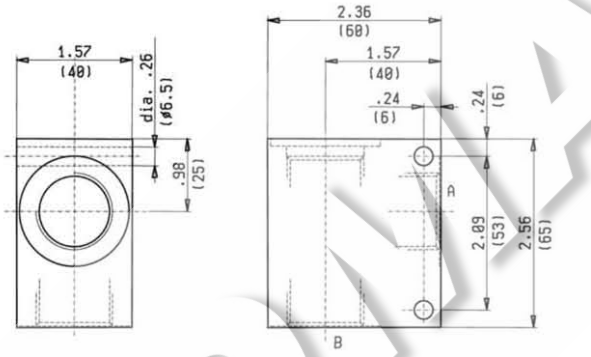

CAVITY	021-E
Dimensions on page	CT.S.005.U

ORDERING CODE	PORTS A-B	WEIGHT Lbs (Kg)
OC.10.09.075	G 3/4	2.866 (1.300)
OC.10.09.076	G 1	2.866 (1.300)

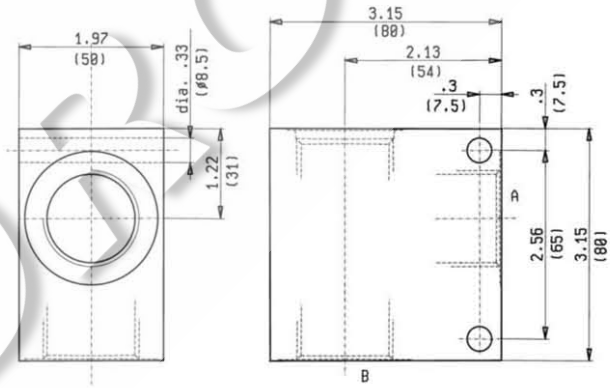

MAX. PRESSURE	6500 psi (450 bar)	FEATURES
		These manifolds can be supplied upon request for working pressures up to 6500 psi (450 bar) and for fatigue cycle applications.